EDON fiberglass

http:\\www.edon.com

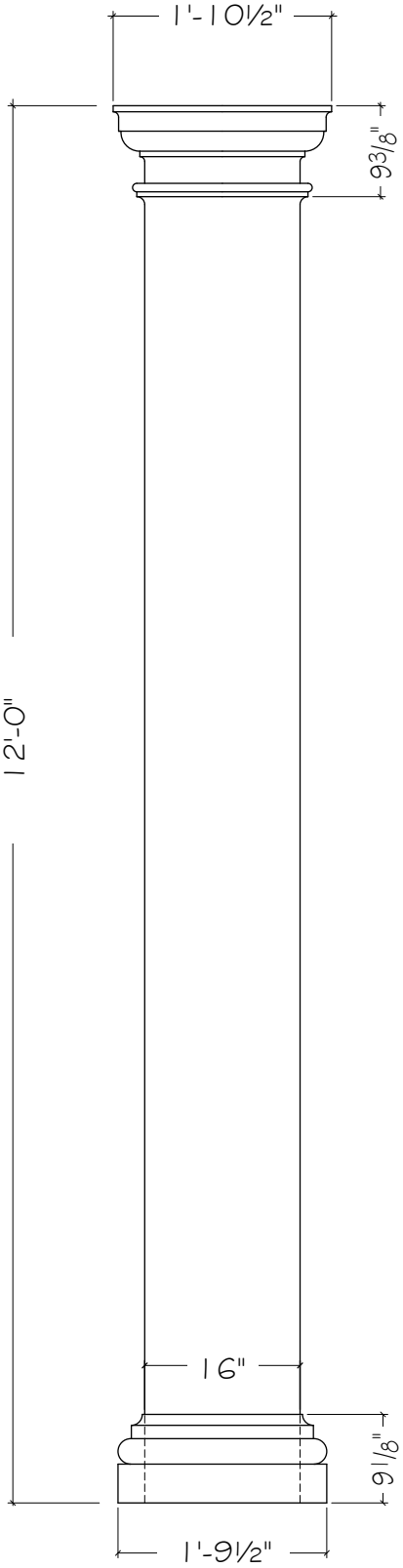

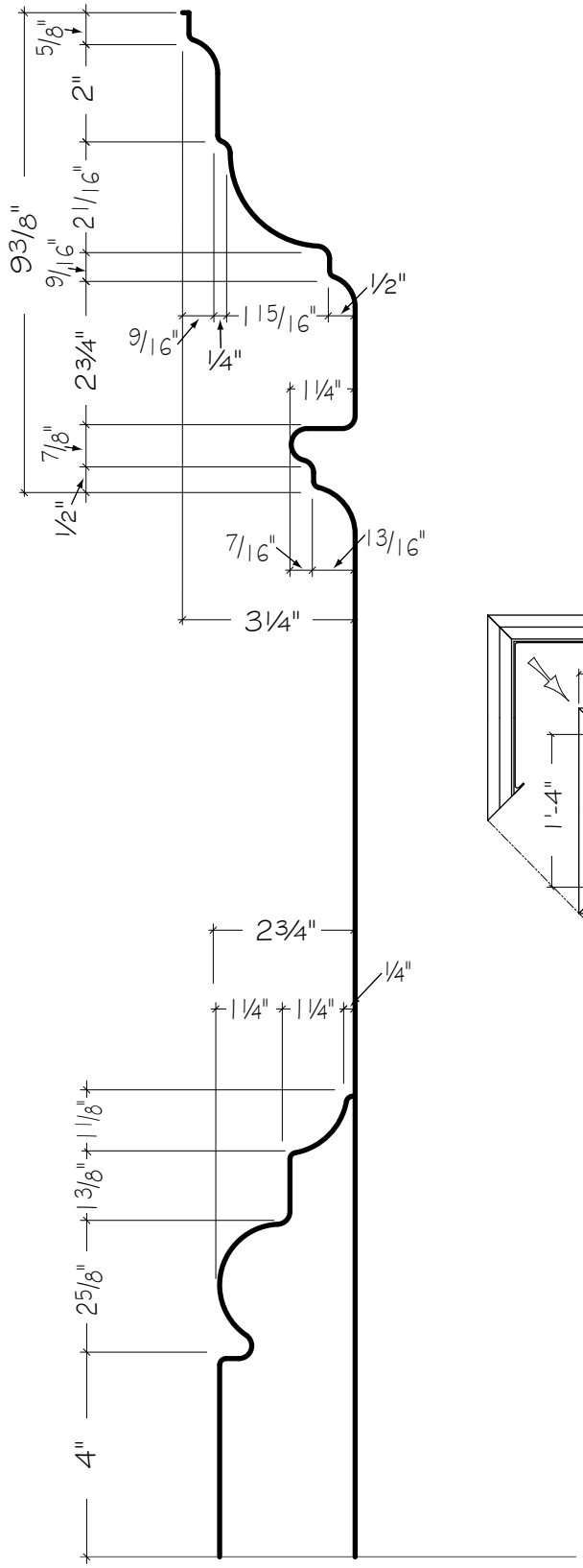

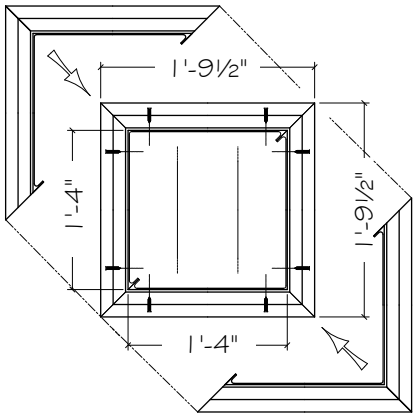

PLAN OF BASE

EP-127
TUSCAN PILASTER

Edon Corp. 1160 Easton Rd., Horsham, PA 19044 ~ Phone: 215/672-8050 ~ Fax: 215/672-9014 ~ Email: edon@edon.com